University of Engineering & Technology, Taxila

Microprocessor and Interfacing

Project Report

Project Title	:	**Voice Controlled Home Automation System**
Submitted To	:	**Dr. Sharoon**
Submitted By	:	**Mohammed Mirzan (22-cp-86)** **Ahamed Ayyash (22-cp-88)** **Ahamed Abbas (22-cp-40)**
Dated	:	**23-May-2024**

Department of Computer Engineering

Abstract

This project presents the design and implementation of a home automation system using voice control via Google Assistant, facilitated by the ESP32 microcontroller and Sinric.pro [1] platform. The primary purpose of this project is to enhance the convenience and efficiency of controlling household lighting through voice commands, providing a hands-free, modern solution for home automation.

Table of Contents

Introduction 4
Literature Review 5
Methodology 6
Component Level and Design Level Detail 6
FlowChart of the Design 6
Diagram 6
Component and Specification Table 7
Results 8
Discussion on Results and Outcomes: 8
Testing 8
Conclusion 10
References 11

List of Figures and Tables

Circuit of ESP32 Home Automation 1 6

Table of components 1 7

Results 1 8

Introduction

This project focuses on developing a home automation system that employs voice control through Google Assistant, using the ESP32 microcontroller and the Sinric.pro [1] platform. With the rise of IoT (Internet of Things) and smart home technologies, there is a growing demand for more convenient and efficient methods to control household devices. Traditional home automation systems often rely on manual operation through switches or remote controls, which can be cumbersome and less intuitive. By integrating voice control, this project aims to provide a hands-free, user-friendly interface for managing home lighting, enhancing the overall user experience and promoting energy efficiency.

The primary objectives of this project are to design and implement a voice-controlled home automation system, demonstrate its feasibility, and showcase its effectiveness. The system comprises an ESP32 microcontroller, a 4-channel relay module, and three bulbs with their respective holders. The ESP32 is programmed to interface with Sinric.pro [1], enabling communication with Google Assistant over Wi-Fi. This setup allows users to control their home lighting through simple voice commands. The scope of the project includes hardware setup, software configuration, and integration of voice control, with the aim of providing a scalable and flexible solution that can be expanded to include additional devices and functionalities in the future.

Literature Review

Home automation systems have become more developed due to the IoT and smart technology development. Many works have been devoted to the various approaches to home appliances control focusing on comfort, productivity, and openness. One of them is to utilize microcontrollers such as Arduino and ESP32, which also can interact with sensors and actors to complete household chores.

Other related studies and projects have dealt with controlling lighting and other appliances using microcontrollers with a manual or remotely operated interface. For example, devices that use Arduino and relay modules to control the on/off state of the lights are fairly popular. These systems use physical buttons, remote controls or web-based interface to control the devices which are connected to them. However, these methods imply direct interaction with the control interface which, despite being efficient, is not very convenient.

Another major improvement that has been made in home automation is the voice commands. Smart home applications based on systems that involve voice commands such as Amazon Alexa, Google Home, and Apple Siri show a possibility of home automation. Such systems usually contain a microcontroller, this as ESP32, connected to the internet and interacting with voice assistant services. Lightings, thermostats, security systems or any other smart home appliances can be controlled by voice commands which further enriches the experience.

In our previous work we carried out during the DLD course, we designed a digital stopwatch that employed the use of LEDs and an Arduino microcontroller. The project entailed designing and constructing a digital circuit that was required to count and display time intervals in the most precise manner. While it lacked voice control, it set the base to learn Microcontroller, code programming and how to interface digital displays. These activities involved basic concepts that were very pertinent with the current home automation project under development and gave practical experience in handling microcontrollers.

Moreover, the existing literature on research papers and projects on IoT-based home automation system have also cited the usage of voice control as one of the advantages. Research has also indicated that voice-controlled systems can minimize the amount of work involved in handling household chores thus being of great help to disabled people or those who do not like to move around much.

Methodology

This project involves the design and implementation of a voice-controlled home automation system using the ESP32 microcontroller and the Sinric.pro [1] platform. The methodology encompasses detailed component selection and system design, supplemented by flow charts, diagrams, and comparative data analysis.

Component Level and Design Level Detail

The key components of the system include an ESP32 microcontroller, a 4-channel relay module, three LED bulbs, their respective holders, switches, and Jumper wires. The ESP32 microcontroller is chosen for its built-in Wi-Fi capabilities, essential for communication with the Sinric.pro [1] platform and Google Assistant. The 4-channel relay module controls the electrical circuits of the bulbs, enabling independent operation of each bulb. The design involves connecting the ESP32 to the relay module, which then connects to the bulbs. The ESP32 is programmed to communicate with the Sinric.pro [1] server over a Wi-Fi network, allowing it to execute voice commands received through Google Assistant.

FlowChart of the Design

Below is a simplified flow chart for the system operation:

1. User issues a voice command to Google Assistant.
2. Google Assistant sends the command to Sinric.pro [1].
3. Sinric.pro [1] processes the command and forwards it to the ESP32.
4. ESP32 receives the command and activates the appropriate relay.
5. The relay toggles the connected bulb on or off.

Diagram

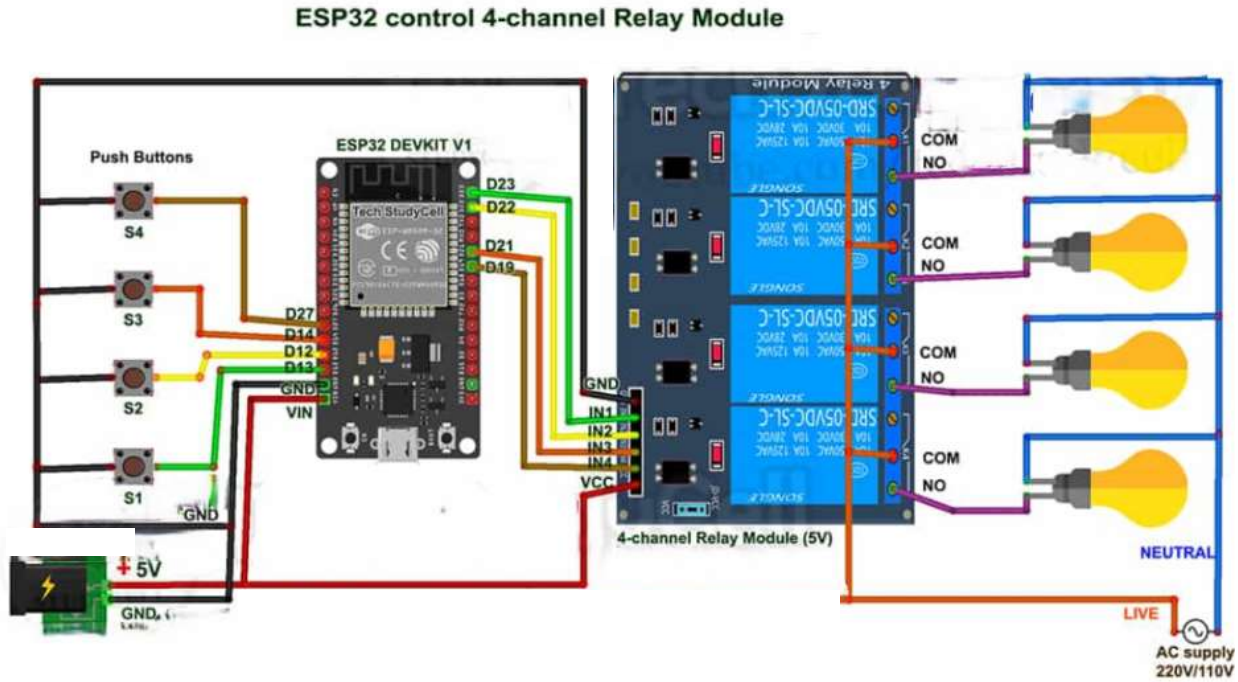

Circuit of ESP32 Home Automation 1

Component and Specification Table

Component	Specification
ESP32 Microcontroller	Wi-Fi and Bluetooth enabled microcontroller
4-Channel Relay Module	5V relay module for controlling high voltage devices
Bulbs	1 Standard bulbs(220V) and 2 night bulbs
Bulb Holders	Compatible with the selected Bulbs
Switches	Turn on and off manually
Jumper wires	Connecting Components

Table of components 1

Results

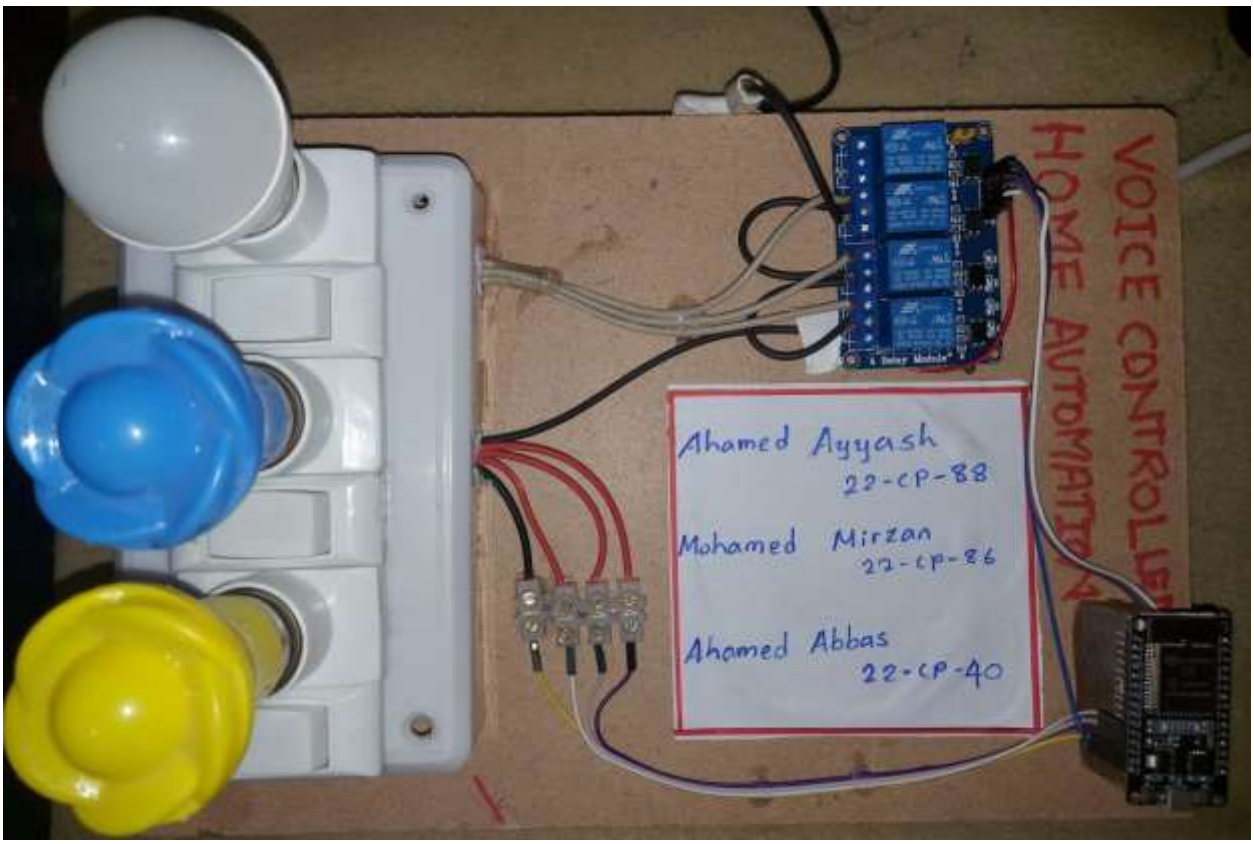

Results 1

This section presents the findings of the home automation project, highlighting the outcomes of the design and discussing the results. Visual aids such as tables and diagrams are used to illustrate the results, and the testing process is described in detail to demonstrate the project's functionality and effectiveness.

Discussion on Results and Outcomes:

The primary outcome of this project is a fully functional voice-controlled home automation system that allows users to control three bulbs via Google Assistant. The ESP32 microcontroller, in conjunction with the 4-channel relay module and Sinric.pro [1] platform, successfully interfaces with Google Assistant to receive and execute voice commands.

Testing

The project was tested through a series of steps to ensure functionality and reliability. The project was tested through a series of steps to ensure functionality and reliability:

1. **Initial Setup:** The hardware parts were arranged, and the ESP32 was interfaced to connect to the Sinric. the speakers to support the pro platform and also identify voice commands from the Google Assistant.

2. **Connectivity Testing:** To verify that the ESP32 had stable Wi-Fi connection with the Sinric.pro [1] it was tested to check its connectivity. problems to pro server and able to take commands.

3. **Command Execution:** Voice control of the Google Assistant system was checked by the use of voice commands that were said in succession. Some of the instructions that were given to test the effectiveness and timeliness of the system include; “Turn on the Yellow bulb”, “Turn off the Blue bulb” and “Turn on all bulbs”.

4. **Performance Analysis:** As for the system’s efficiency, specific tests were made for response time, accuracy of commands, and system dependability when used for long time periods.

Conclusion

In conclusion, this project has demonstrated the successful integration of voice-controlled home automation using the ESP32 microcontroller and the Sinric.pro [1] platform. Key findings reveal the system's reliability, ease of use, and scalability, highlighting its potential to enhance user convenience and control over household devices. The project's significance lies in providing a practical solution for modern smart homes, where voice commands offer a hands-free and intuitive interface for managing appliances. Recommendations for future work include exploring additional features such as scheduling, sensor integration for automation triggers, and expanding device compatibility to encompass a wider range of smart home devices, thus further enriching the user experience and functionality of the system.

References

[1]Sinric.pro [1]. (n.d.). Sinric Pro | Works with Alexa & Google Assistant. Retrieved from https://Sinric.pro [1]/

[2]Iotcircuithub[2] website

IoT based Projects using ESP32 (Google + Alexa) - IoT 2024 (iotcircuithub[2].com)